L-1 TYPE B LAVATORY

TOTO®

LT221

Atherton™ Rectangular Undercounter Lavatory

FEATURES

- 17"x 13"
- Rectangular Undercounter Lavatory
- ADA compliant
- Vitreous china
- Front overflow
- Mounting assembly complete with installation template and mounting screw set for wood countertops
- THU410 is required for marble/granite type counter top installation and must be purchased separately

MODELS

- LT221
  (#01)

COLORS/FINISHES

- #01 Cotton

CODES/STANDARDS

- Meets ADA guidelines and ANSI A117.1 requirements when countertop is installed 864mm (34") from finished floor and lavatory is installed 47mm (1 7/8") minimum from front edge.
- Meets and exceeds ASME A112.19.2/CSA B45.1
- Certifications: IAPMO(cUPC), State of Massachusetts, City of Los Angeles, and others

PRODUCT SPECIFICATION

The undercounter lavatory shall be made of vitreous china. Lavatory shall be 17-3/4"in width and 13-3/8" in depth. Product shall be with overflow and lavatory shall include mounting assembly and be ADA compliant.
TOTO Model LT221_____.

L-1 TYPE B LAVATORY

LT221

Atherton™ Rectangular Undercounter Lavatory

SPECIFICATIONS

- **Waste:** 1-1/4" (32 mm)
- **Overall Size:** 21-3/8" (544mm) x 16-3/8" (417mm)
- **Cutout:** 17(432mm) x 12-5/8"(321mm)
- **Basin Depth:** 4″ (103 mm)
- **Basin:** 17-3/4" (452mm) x 13-3/8" (339mm)
- **Warranty:** One Year Limited Warranty
- **Material:** Vitreous china
- **Shipping Weight:** 23lbs (10.4 kg)
- **Shipping Dimensions:** 22-1/4" x 17-3/8" x 7-1/8″

INSTALLATION NOTES

Mounting Hardware

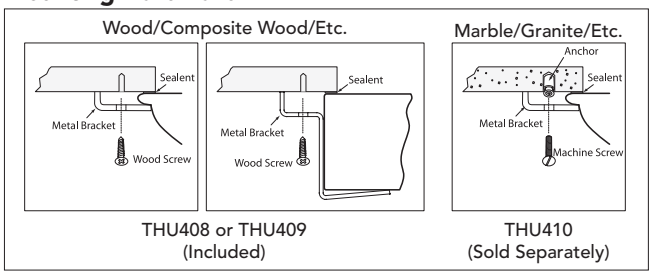

Note: Low flow faucets are recommended.

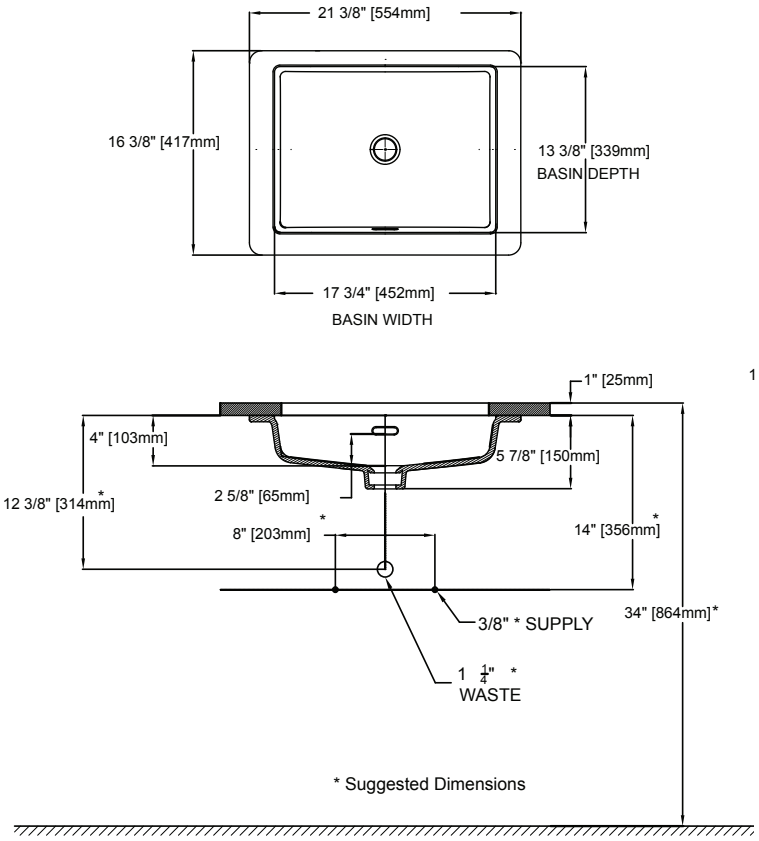

ADA COMPLIANCE CHECK

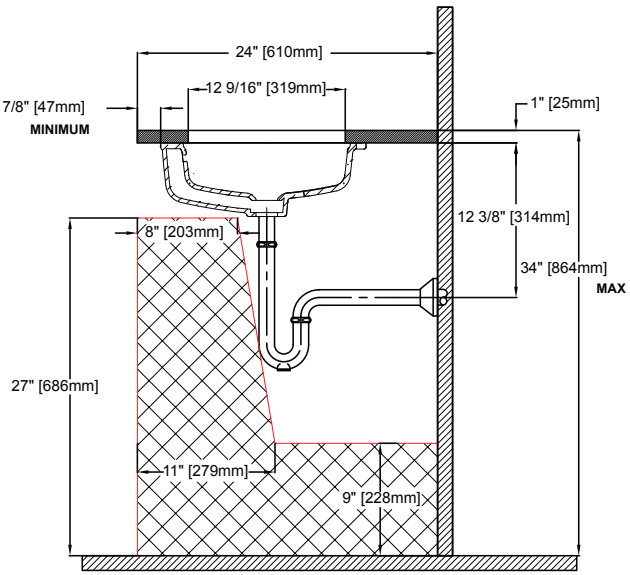

TOTO®

These dimensions and specifications are subject to change without notice.

L-1 TYPE B LAVATORY

CONCETTO
Lavatory Centerset
S-Size

MODEL # 34270001

Pure Freude an Wasser

GROHE

GROHE America, Inc | 200 North Gary Avenue, Suite G, Roselle, IL 60172
Phone: +1 (800) 444-7643 | Fax: +1 (800) 225-2778 | us-customerservice@grohe.com

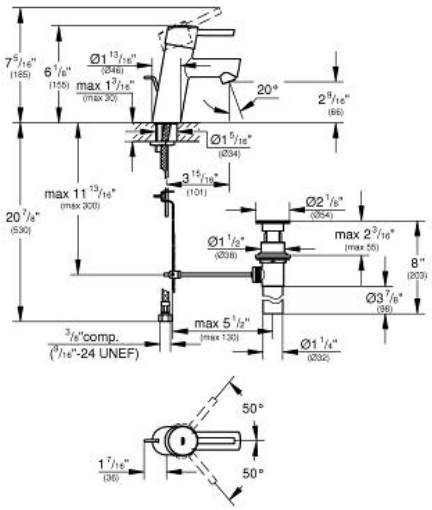

Product Description:
Lavatory Centerset
S-Size

Standard Specification:
- **GROHE EcoJoy®** technology for less water and perfect flow
- Single hole installation
- Metal lever handle
- **GROHE SilkMove** 28 mm ceramic cartridge
- **GROHE StarLight®** finish
- Flow control
- 1 1/4" pop-up waste set
- Stainless steel flex lines
- **GROHE QuickFix®** installation system with centering support
- Temperature limiter
- Max Flow Rate: 1.5 gpm (5.7 L/min)

Applicable Codes & Standards:
- Energy Policy Act of 1992
- NSF 61
- ASME A112.18.1/CSA B125.1
- US Federal and State material regulations
- EPA WaterSense®
- ICC/ANSI A117.1
- CalGreen

Color:
❑ 34270001 001 chrome

L-1 TYPE B LAVATORY

Dearborn® Brass
4675 W. 160th St.
Cleveland, Ohio 44135
Ph: (800) 321-9532
Fax: (800) 321-9535
www.dearbornbrass.com

SUBMITTAL SPECIFICATION

PLASTIC TUBULAR
1-½" P-TRAP WITH THREADED ADAPTER

Engineering Specification: Dearborn Brass Plastic Tubular 1-½" P-Traps with Threaded Adapter are designed for use in tubular drain applications. Options include PVC or ABS plastic adapter and True Blue Premium Washers for superior sealing. Available in white or black polypropylene plastic.

Job Reference

DESCRIPTION

- Made of polypropylene plastic
- Plastic Tubular P-Trap with Threaded Adapter
  - Plastic Tubular Quarter Bend
  - Plastic Tubular J-Bend
  - Schedule 40 Threaded Adapter
  - (3) Slip Joint Nuts
  - (1) 1-½" Washer
  - (1) 1-¼" x 1-½" Reducing Washer
- Reversible P-Trap includes reversible J-Bend
- Deep Flange P-Trap includes plastic deep flange

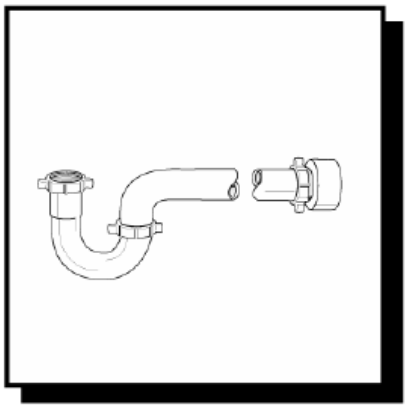

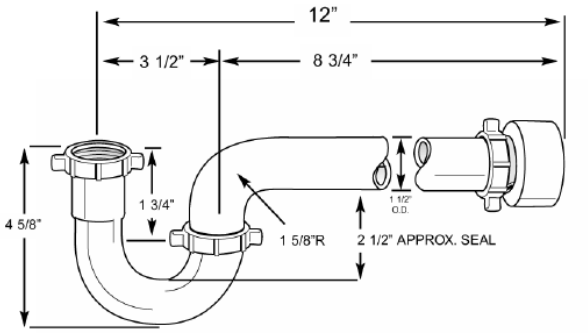

- Meets ASTM F 409
- IAPMO Listed

✓	Product No.	Description	Carton Quantity	Carton Weight (lbs)
	P9703W	1-½" P-Trap w/ Threaded PVC Adapter with True Blue Premium Washers – White		
	P9703BG	1-½" P-Trap w/ Threaded PVC Adapter & Reversible J-Bend – White, Bagged	25	19.4
	A9703WBG	1-½" P-Trap w/ Threaded PVC Adapter & Reversible J-Bend with True Blue Premium Washers –Black, Bagged	25	19.4
	P9704	1-½" P-Trap w/ Threaded PVC Adapter – White	25	11.8
	A9704	1-½" P-Trap w/ Threaded ABS Adapter – Black	25	11.7
	P9704A	1-½" P-Trap w/ Threaded ABS Adapter – White	25	11.8
	P9704AB	1-½" P-Trap w/ Threaded ABS Adapter – White, Bagged	25	19.2
	P9704BG	1-½" P-Trap w/ Threaded PVC Adapter – White, Bagged	25	19.4
	P9704AWB	1-½" P-Trap w/ Threaded ABS Adapter & Reversible J-Bend with True Blue Premium Washers – White, Bagged	25	19.4
	A9704B	1-½" P-Trap w/ Threaded ABS Adapter – Black, Bagged	25	19.3
	P9704DF	1-½" P-Trap w/ Threaded PVC Adapter & Deep Flange– White	25	12.8
	A9704DF	1-½" P-Trap w/ Threaded ABS Adapter & Deep Flange – Black	25	12.6
	P9704DFB	1-½" P-Trap w/ Threaded PVC Adapter & Deep Flange – White, Bagged	25	21.2
	A9704WB	1-½" P-Trap w/ Threaded ABS Adapter & Reversible J-Bend with True Blue Premium Washers – Black, Bagged	25	19.4

L-1 TYPE B LAVATORY

AQUAFLO®

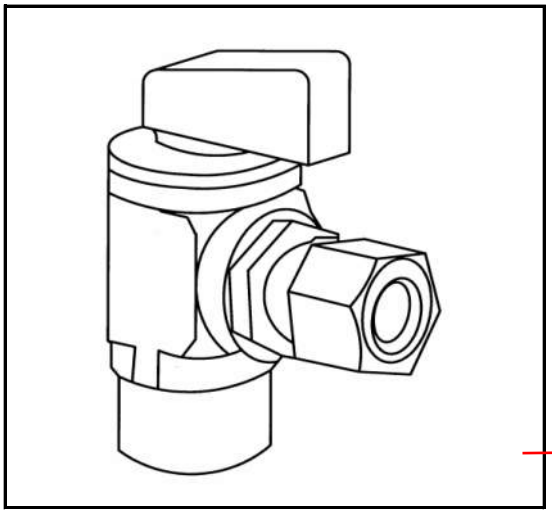

QUARTER-TURN ANGLE VALVES

Specification Sheet

NICKEL		
PART NUMBER	INLET	OUTLET
V-001-A	5/8" O.D. Compr	1/4" O.D. Compr
V-100-A	1/2" Sweat	3/8" O.D. Compr
V-101-A	5/8" O.D. Compr	3/8" O.D. Compr
V-102-A	1/2" F.I.P.	3/8" O.D. Compr
V-103-A	1/2" PEX	3/8" O.D. Compr
V-104-A	1/2" WIRSBO PEX	3/8" O.D. Compr
V-105-A	3/8" F.I.P.	3/8" O.D. Compr
V-106-A	3/8" O.D. Compr	3/8" O.D. Compr
V-107-A	1/2' F.I.P.	3/4" Hose Thread
V-300-A	1/2" Sweat	1/2" O.D. Compr
V-301-A	5/8" O.D. Compr	1/2" O.D. Compr
V-302-A	1/2" F.I.P.	1/2" O.D. Compr
V-303-A	1/2" PEX	1/2" O.D. Compr
V-400-A	1/2" Sweat	1/2" OR 7/16" Slip Joint
V-401-A	5/8" O.D. Compr	1/2" OR 7/16" Slip Joint
V-402-A	1/2" F.I.P.	1/2" OR 7/16" Slip Joint
V-403-A	1/2" PEX	1/2" M.I.P. / Sweat
V-500-A	1/2" CPVC	3/8" O.D. Compr
V-602-A	5/8" O.D. Compr	3/8" O.D. Compr.
POLISHED BRASS		
V-201-A	5/8" O.D. Compr	3/8" O.D. Compr
V-202-A	1/2" F.I.P.	3/8" O.D. Compr

For Lead Free product add "-LL" to the end of the part number.

DESIGN FEATURES

- Quick quarter-turn shut-off.
- Heavy duty brass construction ensures durability.
- Ball style valve will not freeze up.
- Teflon seats for extra wear resistnace.
- Pliable 0-rings will not distort or break down.
- One-year limited warranty

COMPLIANCES/LISTINGS

- IAPMO Certified
- NSF Compliant
- Meet or exceed ASME A112.18.1
- Federal Specification WWP 541E

Certified to NSF/ANSI 61

UPC

OPERATING SPECIFICATION

Temperature: 40-180ºF
Pressure: 125 PSI max.

Product Submittal	
Job Name	
Date	
Part Number	Quantity
Architect	
Contractor	

LSP PRODUCTS GROUP
3689 Arrowhead Drive, Carson City, NV 89706
Phone (800) 854-3215 Fax (800) 243-1777
E-mail sales@lspproducts.com Website www.lspproducts.com

Content matter is subject to change at any time. It is the user's responsibility to ensure the most updated revisions are obtained.

AF/S-2017 (05-11) Rev 3